Cable Reel

Length	120m (150m/300m optional)
Cable Specs	4-core (1.2mm²), 8mm diameter
Durability	300kg anti-kevlar, PUR sheath, anti-corrosion
Winding	Auto winding w/ electromagnetic clutch
Counter Precision	1mm
IP Rating	IP63
Dimension(LxWxH)	570x395x475mm
Total Weight	47.5kg (w/ 120m cable)

Panoramic Lens(Optional)

Imaging System	1/2.8" CMOS, 2.0 Megapixels
Field of view	180°180°
Lighting	Two side-mounted light strips (8W Total)
Protection Rating	IP68
Working Temp	-10°C ~ 50°C
Dimensions	Φ80x96.5mm.
Weight	310g

Pipe Profiler (Optional)

Scanning Frequency	8Hz
Measurement Error	±2cm
Protection Rating	IP68
Working Temp	-5°C ~ 45°C
Dimensions	201x80x132mm
Weight	1.25kg

Main Control

Standard Device	Windows system laptop
Compatibility	Customer laptop supported (no specific reqs)
Connection	WiFi or Internet cable
Software Control	Movement, speed, PTZ, focus/zoom, lighting, lift
Status Display	Time, distance, project info, diameter, pressure, speed
Text Input	Multi-language support (EN, CN, FR, IT, RU, TH, etc.)
Defect Location	Clock positioning display
Warnings	Roll angle overrun, abnormal air pressure

Joystick

Connection	Wired connection with Windows System
Control	Movement, speed, focus/zoom

FOR MORE INFO

+86 18871858099

sales@easysight.cn

www.pipedetect.com

No.16 XingYuanChangStreet, JiangXiaDistrict,Wuhan,China

Follow us on: LinkedIn, Youtube, Facebook

EASY-SIGHT

X5-HS

CCTV Inspection Robot Data Sheet (DN300-1000mm)

Product Overview

X5-HS CCTV pipeline robot features tablet wireless control for real-time HD video display and storage.

Composed of crawler, camera, cable reel and main controller, the crawler carries the camera and executes full operation commands: travel, steering, speed regulation, camera lifting, light control, pan-tilt rotation, focus, zoom and front/rear view switching.The system synchronously records live camera footage and crawler data, supports instant defect snapshot capture, and generates inspection reports right after survey completion.

Key Features

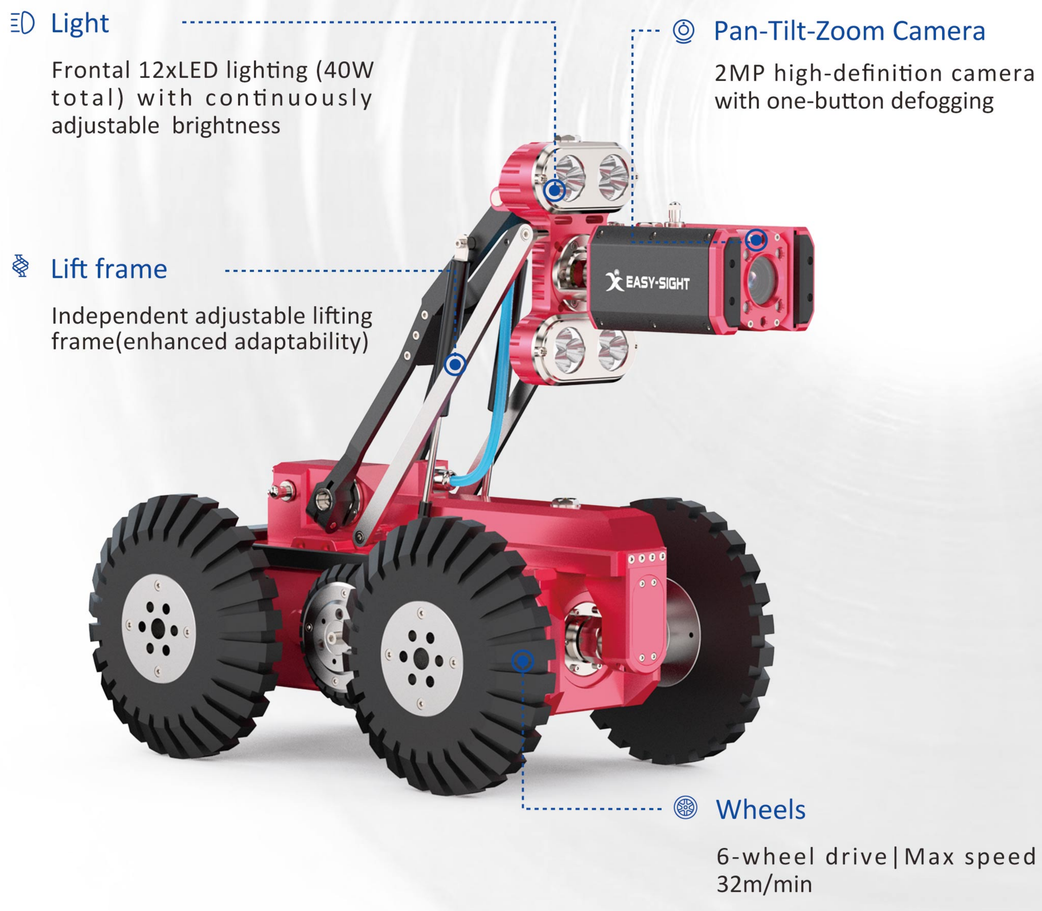

Dimensions

wheel sets: 4/6/8/10-inch

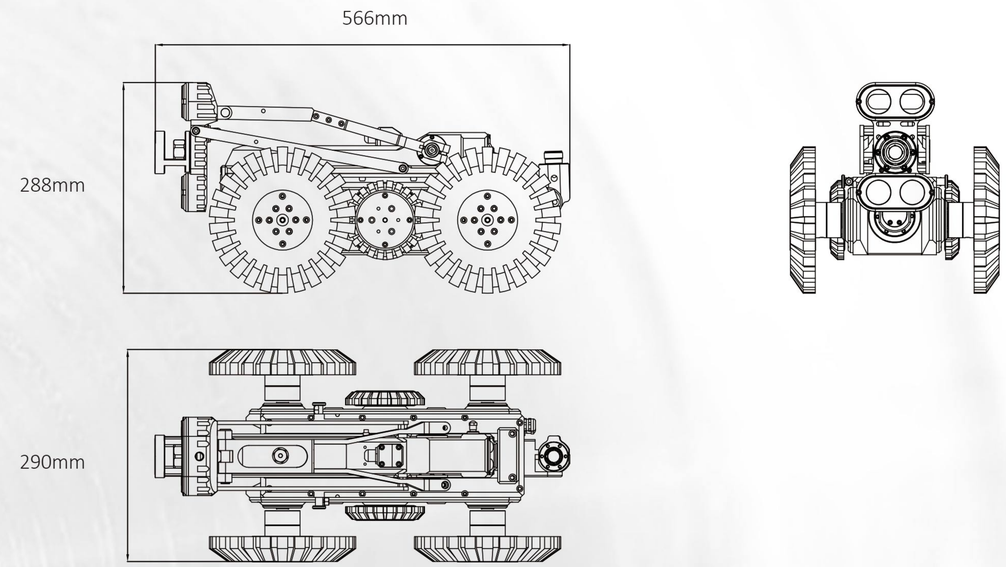

Specifications

Crawler

Pipe Range	DN 300-1000mm
Drive System	Double 90W DC motor, 6-wheel drive
Max Speed	32m/min
Gradeability	Max 45°
Camera Lift	Detachable
Front Lighting	12× LEDs; 40W
Rear Lighting	2× LEDs; 6W
Rear Camera	1920×1080 (2.0MegaPixels)
Clutch	Motorized
Wheels Provided	4", 6", 8", 10" rubber wheels
IP Rating	IP68 (10m water depth)
Working Temp	–10°C ~ 50°C
Dimension(LxWxH)	480×184×110mm (4" wheels, no lift) 580×184×225mm (4" wheels, lowest lift)
Weight	21kg (4" wheels)

Red PTZ Camera

Zoom	10× Optical
Imaging System	1/2.8" CMOS, 1920×1080 (2.0 MegaPixels)
Lighting	4× LEDs; 6W
Optics	FOV 7°-81°, 0.05Lux sensitivity
Rotation	360° endless rotation, ±90° tilt, 1-click reset
Focus	Auto/manual focus
IP Rating	IP68
Working Temp	-10°C ~ 50°C
Dimension(LxWxH)	171×105×88mm
Weight	1.9kg