EASY-SIGHT

Easy Sight

Easy to use

Easy to repair

FOR MORE INFO
+86 18871858099

sales@easysight.cn
www.pipedetect.com

No.16 XingYuanChangStreet,
JiangXiaDistrict,Wuhan,China

Follow us on: LinkedIn, Youtube, Facebook

EASY-SIGHT

QS-D

Pipe Diameter Gauge (DN200-1800mm)

Product Overview

The QS-D Pipe Diameter Gauge is a millimeter-grade intelligent detection device capable of accurately and rapidly measuring core parameters such as pipeline diameter.
With a measurement accuracy of ±2 mm and an error within 0.2%, it provides precise data support for pipeline rehabilitation design.
The product employs a high-precision laser probe that extends into the pipeline, utilizing a 360 ° full-circumference scanning mode to rapidly collect high-density cross-sectional data of the inner pipe wall.

Key Features

MAIN CONTROLLER

Operating System

CAMERA PROBE

FOV 180°×180°, 2.0 MP camera

CONTROL POLE

Carbon fiber rod lergth:1m

LIGHT

4x LEDs; 12W

PRECISION LIDAR

Accuracy:±2mm

Dimensions

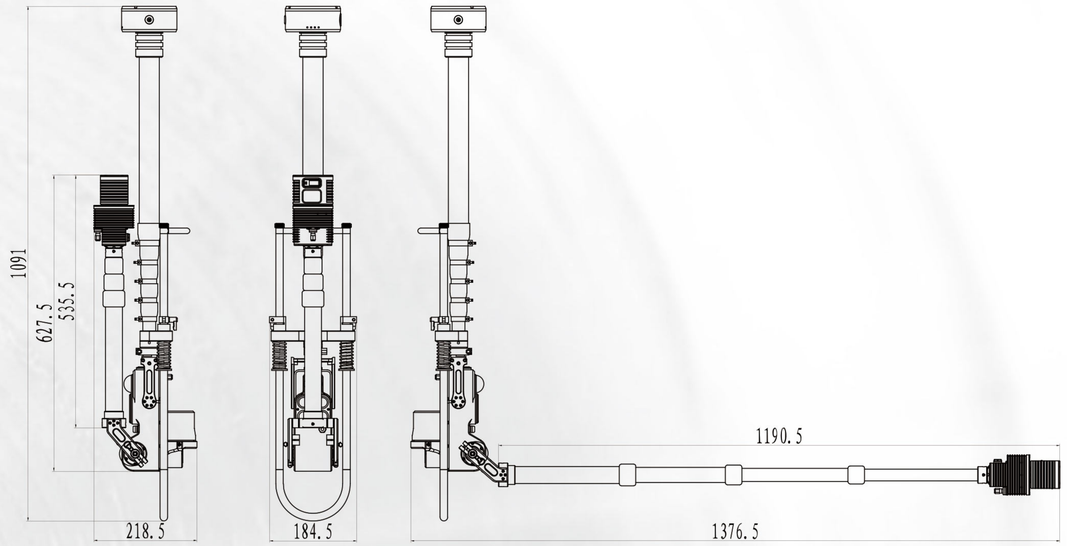

Specifications

Measuring Pole

Pipe Diameter	DN 200~1800mm
Accuracy	±2mm
Sampling Rate	60rpm, 1000 pts/s
Imaging	FOV 180°×180°, 2.0 MP
Lighting	4× LEDs; 12W
IP Rating	IP68
Working Temp	-10°C~50°C
Weight	6.5kg
Battery	2× batteries; 8hrs
Pole Length	Carbon fiber, Standard 4.8m, Optional extend
Measuring Rod	Carbon fiber, Max 1m