WIFI Box

Working Time	3200mAh, ~13 hours
Charger	25.2V/2A
Dimensions	Φ117×58mm
Weight	663g

Probe Battery

Working Time	3500mAh, 2.5h/unit
Dimensions	84×50×86mm
Weight	470g

Control Pole

Material	Carbon fiber
Pole Length	1.5~4.8m
Extension Pole Length	0.8 ~ 1.5m/unit
Max Extended Length	10m

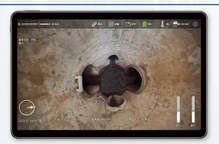

3D Analysis System

Video Res	4K (3840×1920@25fps)
Video Format	INSV, MP4 (Flat/VR mode)
3D Modeling	1-click generation, batch processing
Analysis Tools	Measurement, sectioning, calibration
2D Unrolled Map	1-click HD generation, annotation
Reporting	Customizable, multi-standard, offline capable

FOR MORE INFO
+86 18871858099

sales@easysight.cn
www.pipedetect.com

No.16 XingYuanChangStreet,
JiangXiaDistrict,Wuhan,China

Follow us on: LinkedIn, Youtube, Facebook

EASY-SIGHT

QS-360

3D Panoramic Manhole Inspection System (DN500-2000mm manholes)

Product Overview

The QS-360 3D Panoramic Surveying System is a handheld inspection device capable of rapidly and accurately detecting defects and other parameters in inspection wells. The system consists of a 360° panoramic camera, a control rod, and a control system.

Key Features

CONTROL POLE

Carbon fiber rod
Standord length from 1.5 to 4.8 meters and extended optional

LIGHTING

12W LED strips + 6W LEDs

PROBE

360° Panoramic Camera

MAIN CONTROLLER

Operating System

Dimensions

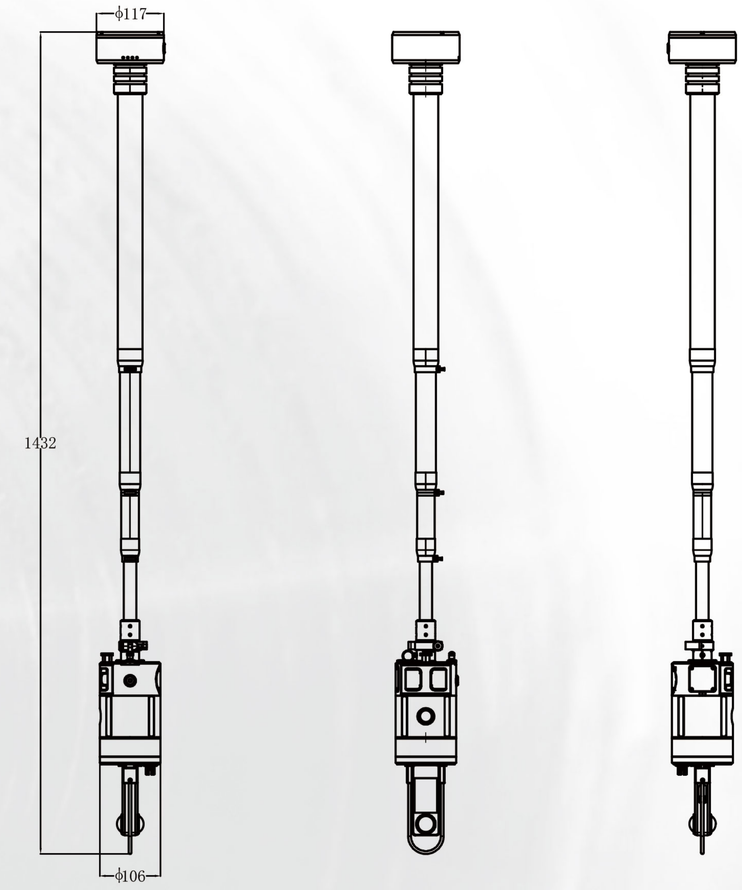

Specifications

Camera Probe

Manhole Diameter	DN 500~2000mm
Imaging System	1/2.8" sensor, F2.0 (35mm)
Lighting	12W LED strips + 6W LEDs
IP Rating	IP68 (10m water depth)
Working Temp	-20°C~40°C
Dimensions	Φ106×366mm
Weight	1.78kg (no battery)